Machine safety specialist (CE)

Assignments – elaboration

TAB1: principles machine safety
Tab1-assignments 20231010

kader
Academy

Question 1-1

Scenario:
A machine is ordered on April 1, 2023, by an end user in the EU based on an offer/model in a catalog. The machine is then manufactured in China and shipped to the end user on June 1, 2023. It arrives at customs on June 20, 2023. The product is sold directly by the manufacturer outside the EU to the customer in the EU via distance selling.

Question 1-1: *What is the date on which this machine is formally placed on the market in this scenario?*

In this example, the date of placing on the market is June 1, 2023. This is the date on which an end user in the EU has purchased the product from a manufacturer outside the EU; the product is already manufactured and ready to be shipped (see point example 5 from Blue Guide paragraph 2.12).

Question 1-2

Scenario:
A machine is ordered by an end-user in the EU on April 1, 2023, based on an offer/model in a catalog. The machine is then produced in China and shipped to the end-user on June 1, 2023. It arrives at customs on June 20, 2023. The product is sold by the manufacturer outside the EU directly to the customer in the EU via distance selling.

Question 1-2: *Can the manufacturer from outside the EU sell this machine directly to the end user located in the EU without the involvement of an authorized representative/importer or distributor?*

Yes, there is indeed no obligation that a manufacturer from outside the EU may only offer a product on the EU market through a European importer or distributor.

Question 1-3

If an end user (production company) purchases various new machinery from third parties and has them assembled by their own technical service into an assembly of machinery, does the end user then need to apply CE marking themselves and thereby comply with all obligations (essential requirements) of the applicable product directives?

Yes, he must provide the complete assembly with an overarching CE marking in accordance with the Machinery Directive. See sheets '12 Machinery Directive'.

Question 1-4

Which of the following examples is considered machinery?

- Production line with overarching control: **Yes**
- Lathe: **Yes**
- Press brake manually driven: **No**, **automatic: Yes**
- Jack (car) **Yes**

Question 1-5

- Do the following products fall within the definition of Lifting accessories?
  Spreader beam en Four-leg sling

- Which of the products must be provided with CE marking? **All, Spreader beam and Four-leg sling as lifting gear, the Jack and Manual chain hoist as machines.**

Spreader beam

Jack

Four-leg sling

Manual chain hoist

Question 1-6

- Is it necessary to apply a CE marking to a conveyor belt (newly placed on the market) based on the Machinery Directive?

  Yes, a conveyor belt meets the definition of a machine (see previous slides, basic definition).

Partly completed machinery– Example 1

- The manufacturer of a conveyor for bulk materials with defined maximum dimensions and weight etc. of the bulk materials to be transported, delivers this conveyor (complete incl. frame) without software and possibly without drive system.
- The software is provided by a system integrator or the customer, the manufacturer can define clear conditions and instructions for assembly, installation and commissioning in the operating instructions.

  No, this conveyor can be supplied as a machine.
  See the next slide for explanation.

Tab1-assingments

Partly completed machinery– Example 1

No, this conveyor can be supplied as a machine.

This further construction is not the fitting of a drive system to machinery supplied without a drive system where the drive system to be fitted is covered by the manufacturer's conformity assessment or the connection on site or with sources of energy or motion.

be considered as part of conformity assessment) and the machinery manufacturer's instructions provide clear information for the installation of the missing parts such that the safety and compliance of the final machinery is guaranteed with the Machinery Directive,

Transportband aangedreven, capaciteit max. 15 kg/m bandlengte

Deze transportband is ontworpen voor stukgoederen met een lager gewicht
Naar de productdetails

Steunen en motorveiligheidsschakelaar niet bij de levering inbegrepen (accessoires)

Tab1-assingments

Partly completed machinery– Example 2

- The manufacturer of a conveyor for bulk materials with defined maximum dimensions and weight etc. of the bulk materials to be transported, delivers this conveyor (complete incl. frame)
- Based on the manufacturer's risk assessment, an inspection hatch is required which stops the drive when it is opened (interlocking guard). The customer wants to have the control system and the safety function to be realized by another party (or itself).
- The manufacturer has defined clear conditions and instructions for assembly, installation and commissioning in the operating instructions.

Is it allowed to supply this conveyor as partly completed machinery?

Conveyor with drive, capacity max. 15 kg/m belt length

This conveyor is designed for lower weight loose bulk materials

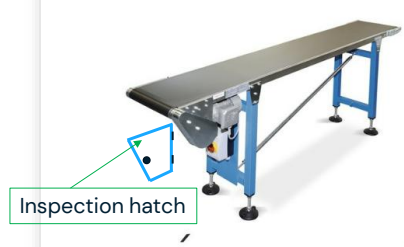

Support and motor safety switches are not included in delivery (accessories)

No, this conveyor can only be finished by the customer after which it is a machine. The inspection hatch falls within the scope of the machine and the CE marking.
See the next slide for explanation.

Tab1-assingments

Partly completed machinery– Example 2

No, this conveyor can only be finished by the customer after which it is a machine. The inspection hatch falls within the scope of the machine and the CE marking.

Machinery that meets the definition in the first three indents of Article 2(a) so it can in itself operate independently, performing its specific application but which only lacks the necessary protective means or safety components, such as guards, is not to be considered as partly completed machinery.

The manufacturer who subcontracts some or all of his activities may in no circumstances discharge himself from his responsibilities, for example to an authorized representative, a distributor, a user or a subcontractor.

Please note: this means that the manufacturer of the machine is also responsible for 'any messy work' by the customer and the conformity assessment by the manufacturer can only be completed after validation of the interlocking guard. Documentation for TF may also be a challenge…

Conveyor with drive, capacity max. 15 kg/m belt length

This conveyor is designed for lower weight loose bulk materials

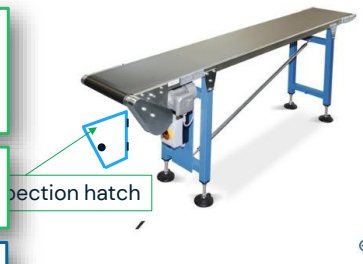

Support and motor safety switches are not included in delivery (accessories)

Tab1-assingments

Partly completed machinery– Example 3

- A pallet wrapper is supplied by the manufacturer with a fixed guard for 3 out of 4 sides where the dangerous parts are accessible
- This is because the customer wants to place the machine close to an existing wall. The fixed guard on the wall side is not necessary.
- The manufacturer indicates in the instructions that the machine is explicitly intended to be placed this 'wall arrangement' and sets requirements for attaching the fixed guard to the floor and wall.

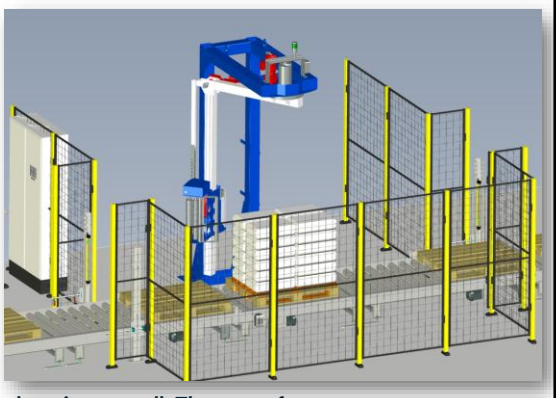

Is it allowed to supply this pallet wrapper as partly completed machinery?

No, this is a machine that is explicitly intended to be placed against a wall. The manufacturer has taken this into account in the risk assessment and with the correct attachment of the fence to the wall according to the enclosed instructions, the machine can very well meet the essential requirements. So no safety equipment is missing here, the machine has been designed for a specific situation.

Tab1-assingments

Partly completed machinery– Example 4

- A pallet wrapper is supplied by the manufacturer without the guard.
- This is because the customer wants to install the guarding himself and wants to be able to tailor it to the space where the machine is set up.
- The manufacturer supplies the required sensor for guard locking on the access door, together with an installation instruction.

Is it allowed to supply this pallet wrapper as partly completed machinery?

No, this is a machine that is explicitly intended to be placed against a wall. The manufacturer has taken this into account in the risk assessment and with the correct attachment of the fence to the wall according to the enclosed instructions, the machine can very well meet the essential requirements. So no safety equipment is missing here, the machine has been designed for a specific situation.
See the next slide for explanation.

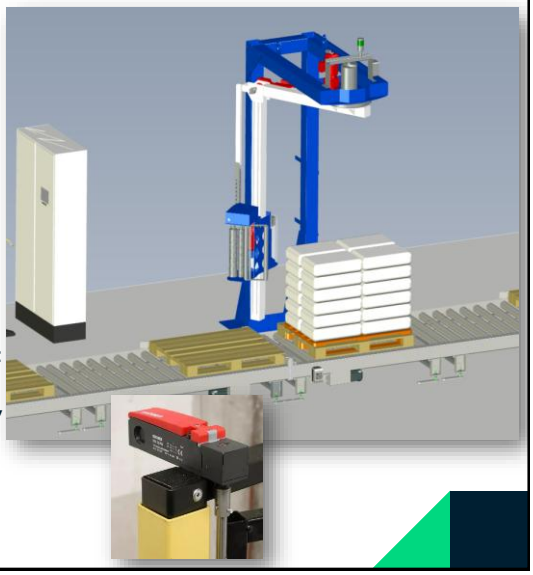

Tab1-assingments

Partly completed machinery– Example 4

No, this is a machine that is explicitly intended to be placed against a wall. The manufacturer has taken this into account in the risk assessment and with the correct attachment of the fence to the wall according to the enclosed instructions, the machine can very well meet the essential requirements. So no safety equipment is missing here, the machine has been designed for a specific situation.

Machinery that meets the definition in the first three indents of Article 2(a) so it can in itself operate independently, performing its specific application but which only lacks the necessary protective means or safety components, such as guards, is not to be considered as partly completed machinery.

Such incomplete machinery does not meet the requirements of the Machinery Directive and must not be CE marked and cannot be placed on the EU/EEA market

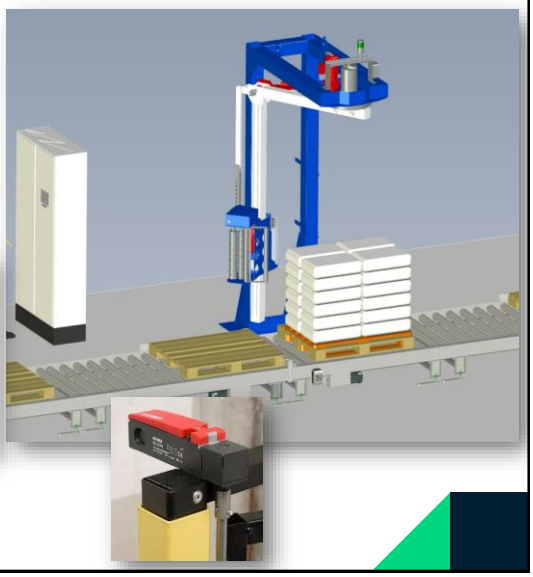

Tab1-assingments

Partly completed machinery– Example 5

- A large machine is assembled and tested in the manufacturer's own production hall (mostly, but not 100% complete).
- The machine is transported in parts to the customer, where it is finished on site by the manufacturer.

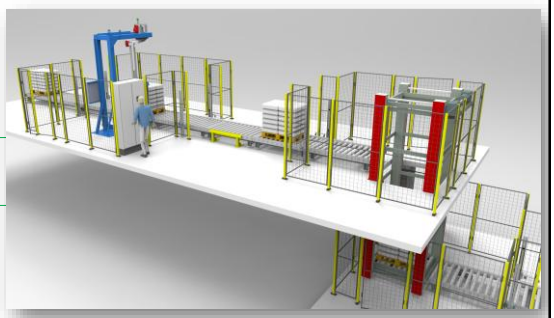

Is it allowed to supply this production line as partly completed machinery?

No, in this situation the machine manufacturing process is only completed at the customer's location. Only after this has been completed can the manufacturer (on location at the customer) finalize the conformity assessment and the machine can be CE marked / put into use.

Machinery constructed in situ is not to be considered a PCM because on arrival at site it comprises a number of parts which may not be compliant (unless one or more of those parts meet the definition of a PCM, which includes being specifically intended for incorporation). It is still a machinery to which Machinery Directive applies so it must undergo conformity assessment and CE marking before it is first put into service.

Tab1-assingments

Partly completed machinery– Example 6

- An industrial robot is supplied without 'robot cell' / guards, protections and specific application.
- The manufacturer provides clear instructions and conditions to allow the robot to move safely.

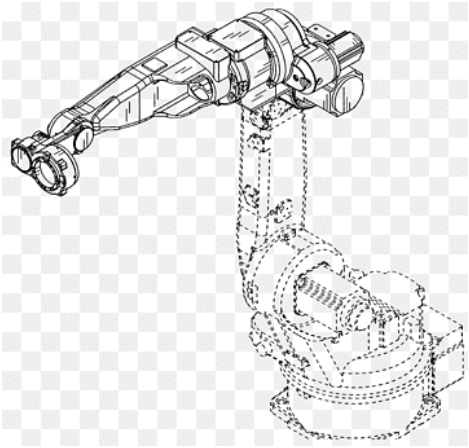

Is it allowed to supply this industrial robot as partly completed machinery?

Yes, this is a clear example of partly completed machinery. The manufacturer of this (series-built) robot does not know for which specific application it will be used, what risks it may involve and what measures must be taken to bring the machine into compliance with the essential requirements of the Machinery Directive.

Tab1-assingments

Homework assignment module 1

1. Make a clear description of the chosen machine that will be used as a case study during the course.
2. Describe the intended use and foreseeable misuse for the case study.
3. Determine which Directives apply to the chosen (fictitious) machine.

Submit by the next lesson.

kader
Academy